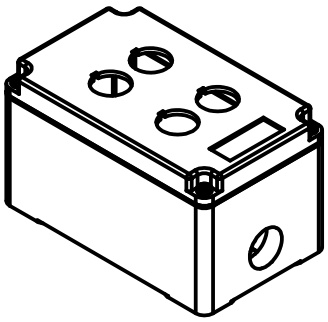

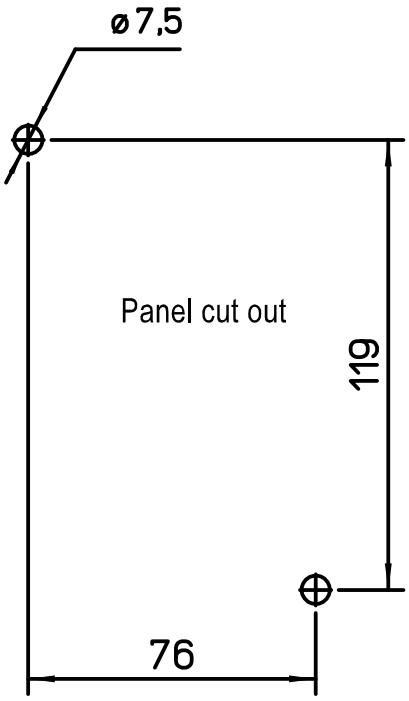

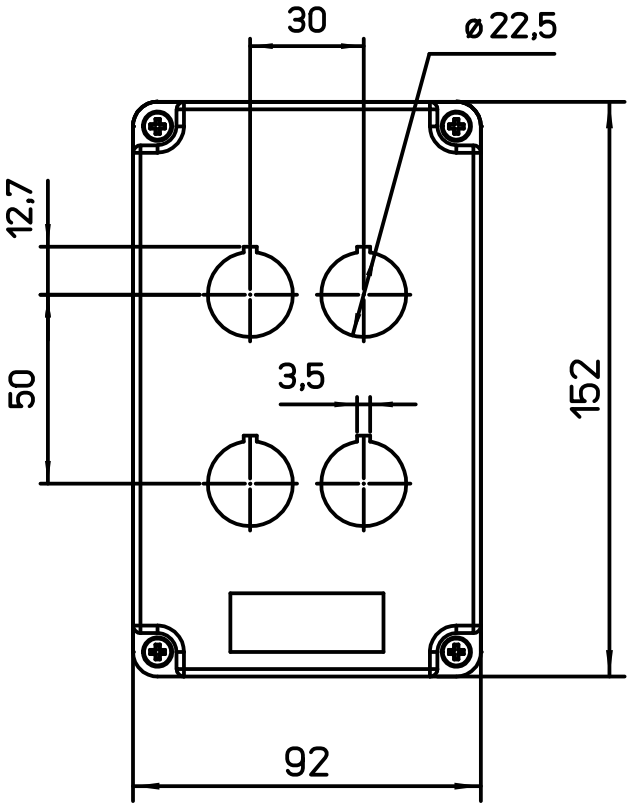

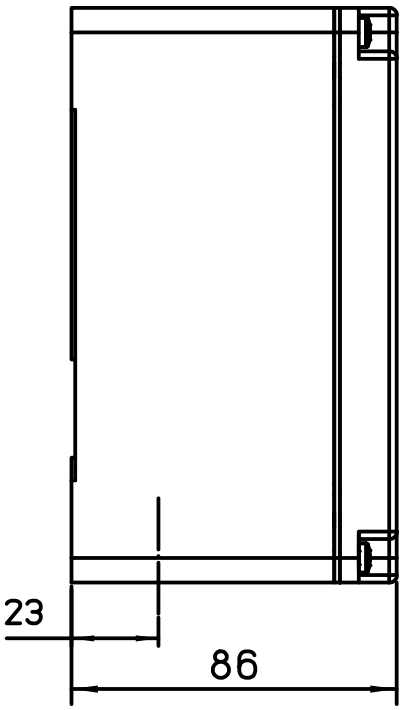

Diritti riservati All rights reserved

dimensions in mm	A2M 0915.04	Scale	
Date 26/07/16	Box 92x152x86	1:2	
Sign. F.Zaffora			